DENSO

Member of the TOYOTA Group

SCANNER

AT30Q

SERIES

Driven by quality.

TOUCH SCANNING OF BOTH LINEAR AND 2D CODES

DESIGN AWARD 2016

5 YEAR WARRANTY

Touch scanning while checking codes enables every user to work accurately and quickly

Operability supporting operators

Touch scanning of both 1 and 2D codes while checking codes

The AT30Q supports not only distant scanning but also touch scanning, which enables every user to scan codes accurately. The innovative new design allows users to see the codes as they scan them.

Supporting operators

Weighing just 125 g, the light and compact body reduces operator strain. Furthermore, a loud buzzer and highly visible check LED ensure readings are confirmed.

Ergonomic design

The AT30Q is designed so the user can quickly pick up the scanner when lying down. Further, the grip's bulge ensures a gentle fit in the user's hand, reducing strain on operators who work for long periods. The trigger is designed so the user's finger naturally rests right on it and functions with a noticeable click feeling.

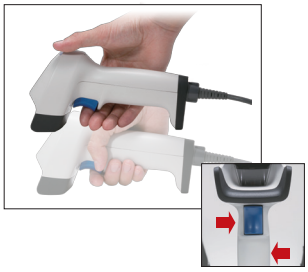

Outstanding scanning performance

Contributing to expanding services using mobile coupons and mobile membership cards

The AT30Q can scan codes displayed on mobile phones and smartphones. It can be used both for normal PoS check-out operation and reading mobile coupons and mobile membership cards, enabling a wide range of applications.

Highly capable for reading poorly printed labels

The AT30Q has such a high performance scan engine that it can read dirty, dammaged and poorly printed codes.

Low risk ilumination source

The AT30Q light source is low wavelenght, so reducing potentially dangerour glare if directed towards someone eyes. The soft illumination light ensures a people-friendly work environment.

Reading mode can be selected according to the operation

Point Scan Mode

The AT30Q can read only the targeted code in the center even when multiple codes exist in the reading area.

One-time reading of multi-row barcodes

AT30 can read a barcode with up to three rows at a time.

Concatenated QR Code reading

AT30 can read a concatenated QR Code at one time.

Durability providing peace of mind for a long time

Best-in-class durability

The AT30Q is designed to withstand a 2-meter drop impact and other multiple impacts during daily operations, it can resists 100,000 falls from a height of 20 cm, giving operators peace of mind for a long time about the product's integrity. Further, the AT30Q has an IP42 rating, providing protection against water and dust.

Fail-proof design down to detail

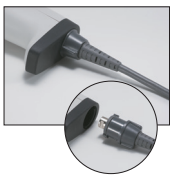

The point of connection is often prone to failure so by providing a very robust and durable connector cover DENSO have ensured that this risk is minimised.

Configuration function ensures easy deployment

Parameters can be easily set on a PC

The AT30Q comes with the free software application "Scanner Setting 2D," enabling users to easily set parameters such as reading conditions and data formats, based on the objects to be read. Several convenient functions reduce customers' workload concerning application development.

Data collation and edit functions eliminate the need for development of a dedicated application

The AT30Q is equipped with a function to compare the registered master data with the read data, which enables easy establishment of systems for taking inventory, etc. Furthermore, the software application "ADF Script" runs on the scanner, making it easy to edit data freely without developing a dedicated application, including data sorting, extraction and conversion.

DENSO

SCANNER AT30Q

AT30 series specifications

Type			AT30Q-SM(U)	AT30Q-SM(R)	AT31Q-SM
Scanner	Method		Area Sensor		
	Readable codes	2D Codes	QR code, SQRC, iQRcode, Micro QR code, Data Matrix (ECC200), PDF417, Micro PDF417, Maxi code, Aztec, GS1 Composite		
		1D Codes	EAN-13/8 (JAN-13/8), UPC-A/E, UPC/EAN (with add-on), Interleaved 2 of 5 (ITF), Standard 2 of 5 (STF), CODABAR (NW-7), CODE39, CODE93, CODE128, GS1-128 (EAN-128), GS1 Databar (RSS)		
	Minimum resolution	2D Codes	0.167 mm		
		1D Codes	0.125 mm		
	Marker		LED point marker		
	Display scanning		Available		
	PCS value		0.30 min		
	Pitch/Yaw		±50°C		
	Skew angle		360°		
	Image capture		Available (output BMP, JPEG and available thumbnail function)		
	Scanning confirmation		Confirmation LED (Blue, Green, Red), Buzzer		
Communication Interface	Method		USB*1	RS-232C	
	Connector		USB connector (A type)	Dsub-9pin (female	
	Cable length		2m straight cable	2m straight cable, 5m straght cable	
Power			Supply from the connection*2	Supply from the connection, directed AC adapter	
Environmental requirements	Protection rating		IP42		
	Drop resistance*3		0,2 m x 100.000 times / 2,0 m (on concrete floor)		
	Operating temperature		-5°C to 50°C		
	Operating humidity		10 to 90% RH (without dews)		
Weight (Except cable)			Approx. 125 g		

*1: Two methods are supported: a USB keyboard interface and a USB-COM interface. The factory default is USB-COM interface. *2: Please check the connection beforehand because this type of connection may not be possible depending on the model of the PC or USB hub. *3: Result obtained in a test under regular temperature is shown and not meant as a guarantee.

Dimensions

Unit: mm

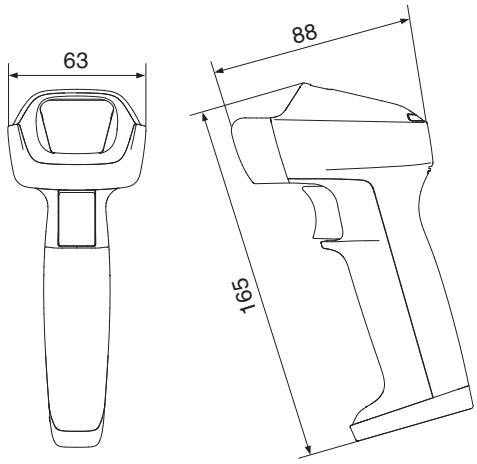

Scanning performance

2D code model

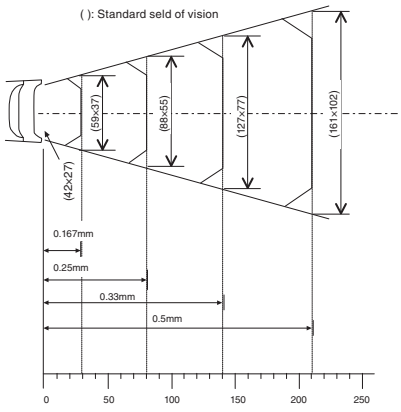

Distance from the scanning portion to the code surface (mm)

Barcode model

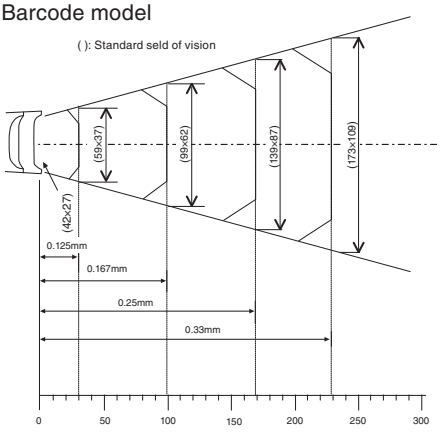

Distance from the scanning portion to the code surface (mm)

Accessories

- Scanner
- Interface cable
- AC adaptor (Only for the RS-232C model using an AC power adapter)
- Operation Guide
- Instruction manual

Optional accessories (separately sold)

- Stand • S-AT30 (Scheduled to go on sale)

Software (separately sold)

- USB driver (Active USB-COM port driver)
- Setting software (Scanner Setting 2D)
- Setting software (SQRC Setting)
- Keyboard emulation software (QR_kbif)

Items with this mark can be downloaded on our webpages for free.

TT Network Integration Europe GmbH

DENSO Auto-ID Business Unit

Immermannstr. 65 B

D-40210 Düsseldorf

Phone +49 211 545547 450

info@denso-autoid-eu.com

For more information, please visit our website

http://www.denso-autoid-eu.com

● QR Code, SQRC, and Advanced Scan are registered trademarks of DENSO WAVE Incorporated.

● Appearance and specification may be changed without prior notice for improvement.

● Data on this catalog are as of October 2016.

DENSO WAVE INCORPORATED

1120G-1 2016.2